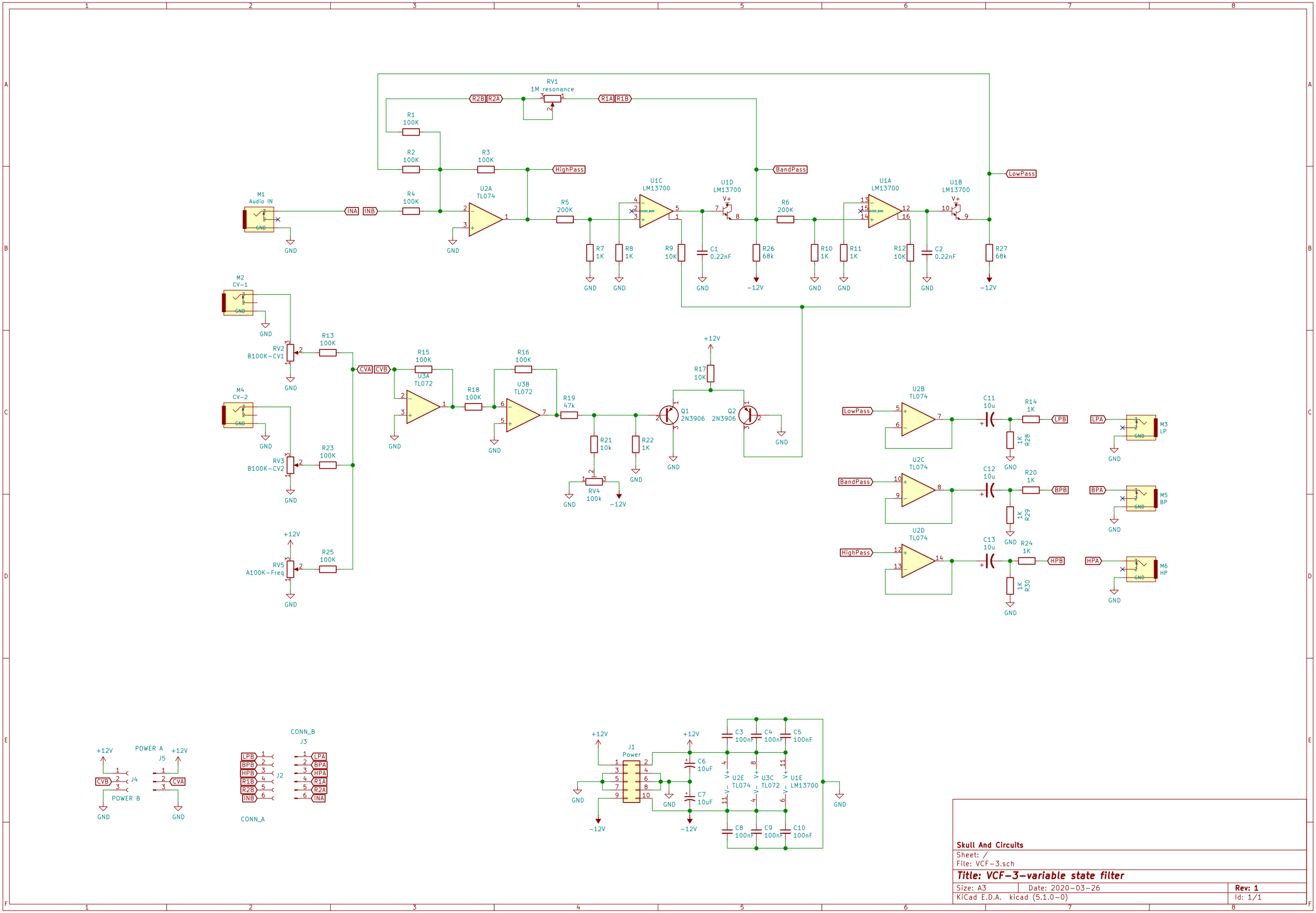

Skull And Circuits

Sheet: /

File: VCF-3.sch

Title: VCF-3-variable state filter

Size: A3	Date: 2020-03-26	**Rev: 1**
KiCad E.D.A. kicad (5.1.0-0)		Id: 1/1