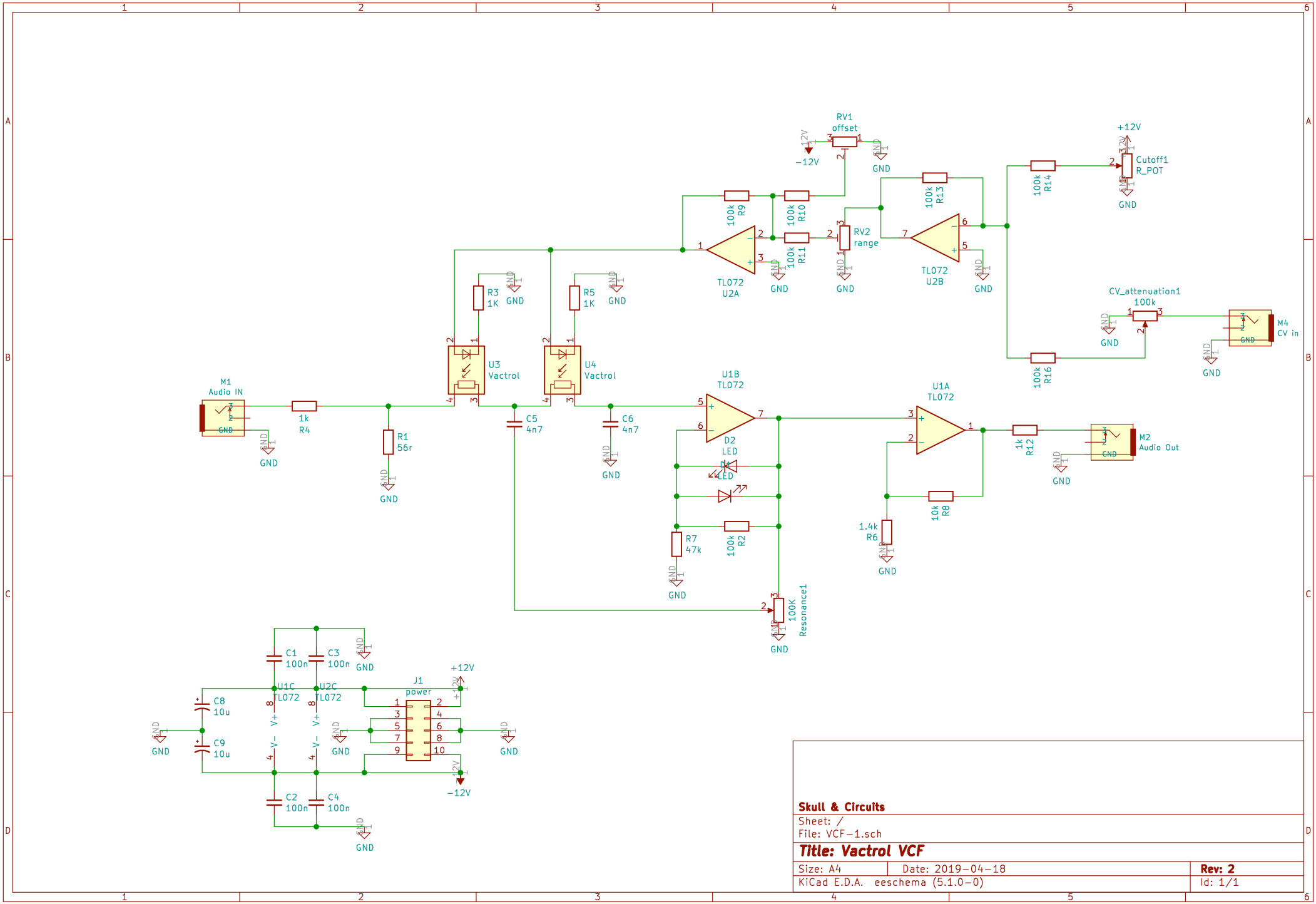

Skull & Circuits

Sheet: /

File: VCF-1.sch

Title: Vactrol VCF

Size: A4	Date: 2019-04-18	**Rev: 2**
KiCad E.D.A. eeschema (5.1.0-0)		Id: 1/1